Concern Resolution Process for In-house Manufacturing

QC Story

QC STORY PROJECT

PROJECT TITLE :-

" To Eliminate concern of hood inner panel damage near latch area in Marazzo vehicle at CAI of SXTCF "

Mahindra and Mahindra Ltd, Nasik Plant, Scorpio –Xylo TCF.

	Plan	Actual
Start Date	**15.02.2019**	**20.02.2019**
Completion Date	**30.05.2019**	**20.06.2019**

Current Status: **Closed**

Cross Functional Team

Sr. No	Description	Name	Designation	Dept	Phone
1	**Team Leader**	Satish Pagar	L8-O	STCF	9822209653
2	**Mentor**	Rahul Narkar	DGM	STCF	9881080299
2	**Mentor**	Mandar Joshi	L6-M	STCF	9689003630
3	**Member 1**	Kiran Bhosale	L6-M	PRES S PU	9890610151
4	**Member 2**	Prasad Deore	L7-0	STCF	9764005447
5	**Member 3**	Parvez Ansari	L7-0	XBS	8888805740
6	**Member 4**	Mahesh Savakar	L7-0	STCF	8888897833

Step1. Select Subject

Brief Description : Hood inner panel damage in Marazzo vehicle at CAI is repeat V1 concern & average 5 vehicle reported per day.

- What : Hood inner panel damage near latch area in Marazzo vehicle.
- Where : At CAI tester line during check & RFI Audit.
- When : Since FEB 2019.
- Who : By CAI tester line inspector.
- Why : Repeat issue in CAI,V1 severity concern may leads to body panel rusty.
- How : Avg 5 vehicles per day.

NOT OK

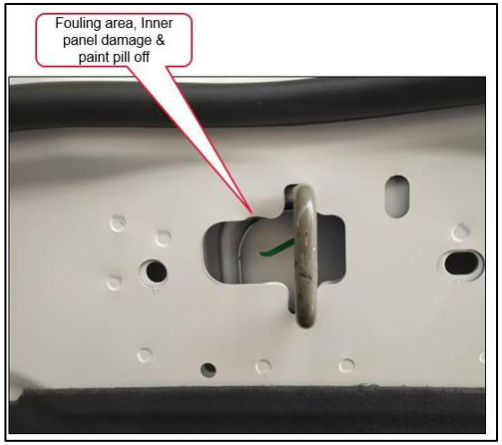

2. Justify the choice (reasons)

PROMISE 2022
AUTOMOTIVE SECTOR

We Will Grow

Revenue 75% | Profit 100%

By

'Enhancing lifestyle' in personal segment
'Enriching livelihood' in commercial segment

Being #1 in UV, SCV, EV and #3 in HCV
Doubling volume from overseas markets

Leading in next generation mobility solutions

#InspiringPeopleToRise

Crusade 2.0

Departmental Objective :-
BIQ – DPR Improvement
- FRC / FBO Improvement

2. Justify the choice

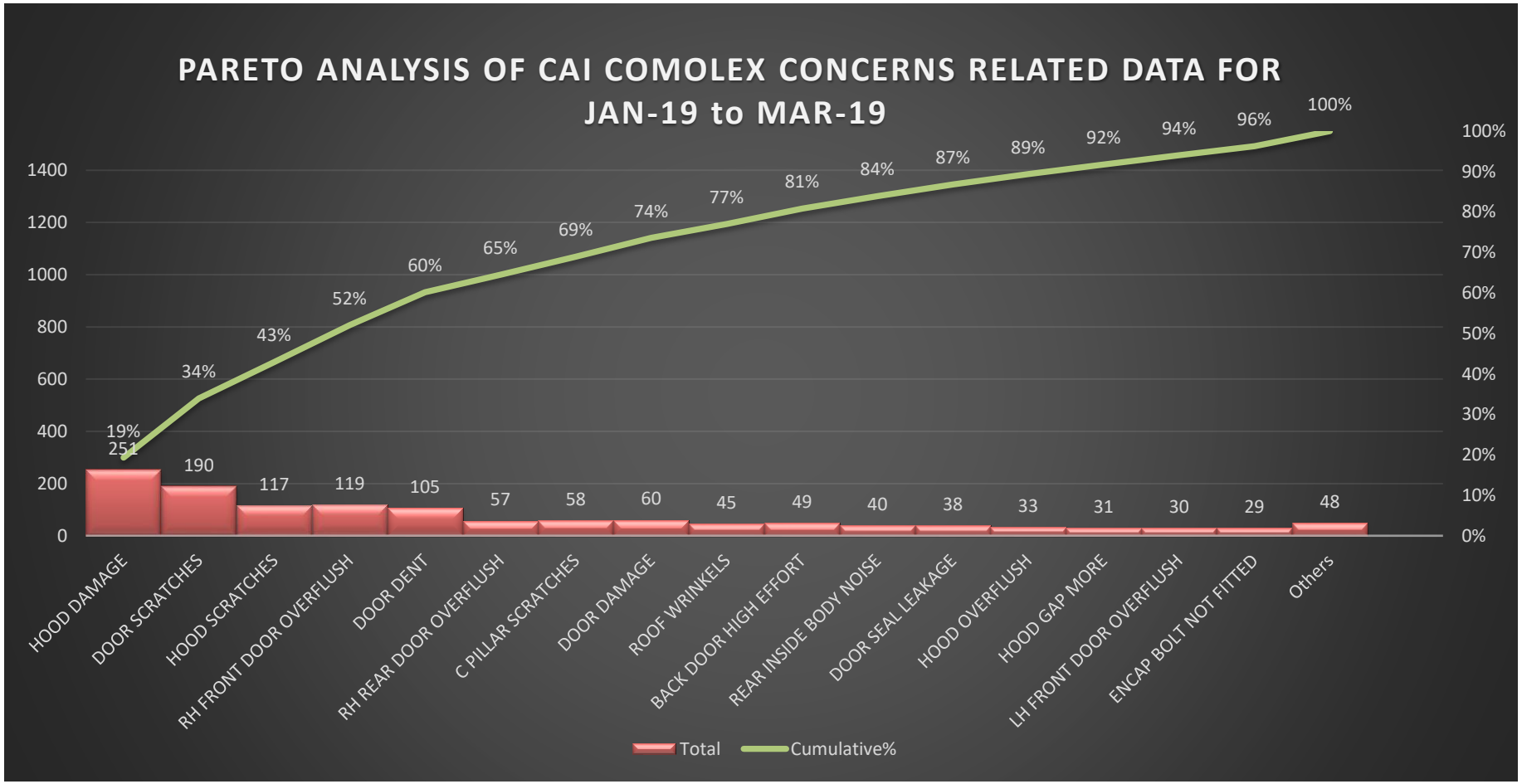

INFERENCE :-

AS PER PARETO GRAPH HOOD DAMAGE ISSUE IS TOP DEFECT AT CAI.

2. Justify the choice

Cost of Poor Quality-Rework

Rework Cost estimation		
Description	Units	
Rework time (Approx)	Min	5
Avg Concerns/Day	Nos	5
Total Required Rework time per day	Min	25
Effective working time	Min	465
Operator required /day	nos	0.05
Approx Operator cost/ day	Rs	2256
Operator cost /concern	Rs	121.29
Avg no. of working days	days	25
Operator cost /month	Rs	3032.26
Operator Cost/year	**Rs**	**36387.10**

2.b Immediate Containment Action

- ❑ **Check point added at TRIM-1 buy off for damage checking.**
- ❑ **Check point added at FAI buy off for damage checking.**

Step 3. Understanding Current Situation

4M Analysis (Part 1)
(Conformity Analysis - 'L0')

PU/ Area :STCF
Cell / BWT / Line:Trim 1/BWT1

Requested By- MQA | Date -26.03.19 | Source -RFI | 4 M Analysis Part 1 Sr.No :

Problem / Concern Statement :Hood damage from inside near striker

FMEA Severity /Gravity : ☐ V1+ ☑ V1 ☐ V2 ☐ V3 | No of Incidences on the day (Including Yard check) : 1 | VIN / Aggre. No.- | Model :U321

Date of Incidence/ Assy : 23.03.19 | Shift / Time : 2nd | Whether SC/CC/Z parameter affected ? ☐ YES ☑ NO ☐ Z ☐ CC ☐ SC

Immediate containment action for Customer Protection :
Yard check done

Does a related 4M Analysis - Part 1 or QC story already exist ? ☐ YES ☑ NO | If Yes | 4M Analysis Part 1 Sr. No. / QC Story Sr. No

Failure mode or cause/s identified -

Problem Assigned to - | BWT . :

Does a control already exist ? ☐ YES ☐ NO

Stage / Post Analysis -

Operator Name : R K Hirgude

Man(Human Action)

Is operator trained ?	☑ YES ☐ NO
Operator level (I.L.U)	I
OR Dexterity level(1…4)	3
Is operator under training ?	☐ YES ☑ NO
Is operator temporary for Stage ?	☐ YES ☑ NO
Bad rew ork ?	☐ YES ☑ NO

Method(process)

Main steps are respected ?	☑ YES ☐ NO
Is there a related key point in SOP / SOS?	☐ YES ☑ NO
Are the reasons for key point know n ?	☑ YES ☐ NO
Are operating reqmnts respected ?	☑ YES ☐ NO
Is the defect part of the Buy off / Checkman list ?	☐ YES ☑ NO
Was it detected by Inspector/ Buoff Opr ?S.P Kale	☐ YES ☑ NO

Other

Is there a Control Plan ? (Record in Analysis table)	☑ YES ☐ NO
Is the packaging standard defined for the part ?	☑ YES ☐ NO
Is the packaging standard respected ?	☑ YES ☐ NO
Is there any alert mechanism for failure ?	☑ YES ☐ NO

Machine

Is the specified /Tool / Fixture facility used ?	☑ YES ☐ NO
Last calibration dates	
Facility /Tool / Fixture in good condition ?	☑ YES ☐ NO
Is it a substitute facility ?	☐ YES ☑ NO
Are machine parameters known ? (Record in Analysis table)	☐ YES ☑ NO
Parameters are respected ?	☐ YES ☑ NO

Product Failure

In only one shift ?	☑ YES ☐ NO
In only one line ?	☑ YES ☐ NO
The problem follow s the vehicle ?	☑ YES ☐ NO
The problem follow s the part ?	☐ YES ☑ NO
Is it a repeat problem ?	☐ YES ☑ NO
Is the suspected parameter measurable ? (Record in Analysis table)	☐ YES ☑ NO

Material/ Consumable

Is the specified product used ?	☑ YES ☐ NO
Did it evolve / Change ?	☐ YES ☑ NO
Is the storage SOP respected ?	☑ YES ☐ NO
Is the shelf life / expiry date respected ?	☑ YES ☐ NO
Is the part as per FIFO?	☑ YES ☐ NO

Note : 1. If both fields (Yes/NO) are kept unmarked, it means that mentioned factor is not applicable for this concern)

Analysis Conclusion (Attach Sketch/ Photograph if necessary) -
After analysis found that R K Hirgude App deployed on wiring stage for Hood latch fitment.He has not done the hood latch bolt pre tighting threads are not fully inserted & at buy off stage during hood closing it gets close in wrong position & hood got damaged.In underbody stage Vikas Jadhav deployed for hood latch tightning & he has done as per SOS.
At BWT3 buyoff stage Mr S P Kale deployed as a RHS checkman but he has not detected the defect at buyoff.

Sno	Product / Process / Machine / Parameter	Spec.	Actual	Remark

Is 4M Analysis Part 2 required ? ☐ YES ☑ NO

Is the substitute transport mode used ? ☐ YES ☑ NO | **Is the packaging defined ?** ☑ YES ☐ NO

Actions -

1.Containment Action Awareness given to stage associate through DRF.	Resp Dinesh	Date 27.03.2019	Status Close
2. Permanent Action - 1.SOS revised for full thread prefitment at wiring stage. 2.Check point added in BWT 3 buy off checksheet.	Resp Dinesh	Date 27.03.2019	Status Close
Analysed by Name/s - Dinesh Nagrale Date - 26.03.19	Choice :	☐ WSS ☐ QC Story	

Inference from L0,
Problem follows with vehicle,
need detail analysis.

4M analysis Good and Not so good observations	
MAN	Operator Dext. Level L3
Method	Operator aware of key point and check present at buyoff
Others	Control plan adhered on stage
Machine	Tools used are calibrated
Product failure	Problem follows vehicle
Material	Handling and shelf life of part adhered

NO QUICK WINS

Step 3. Understanding Current Situation

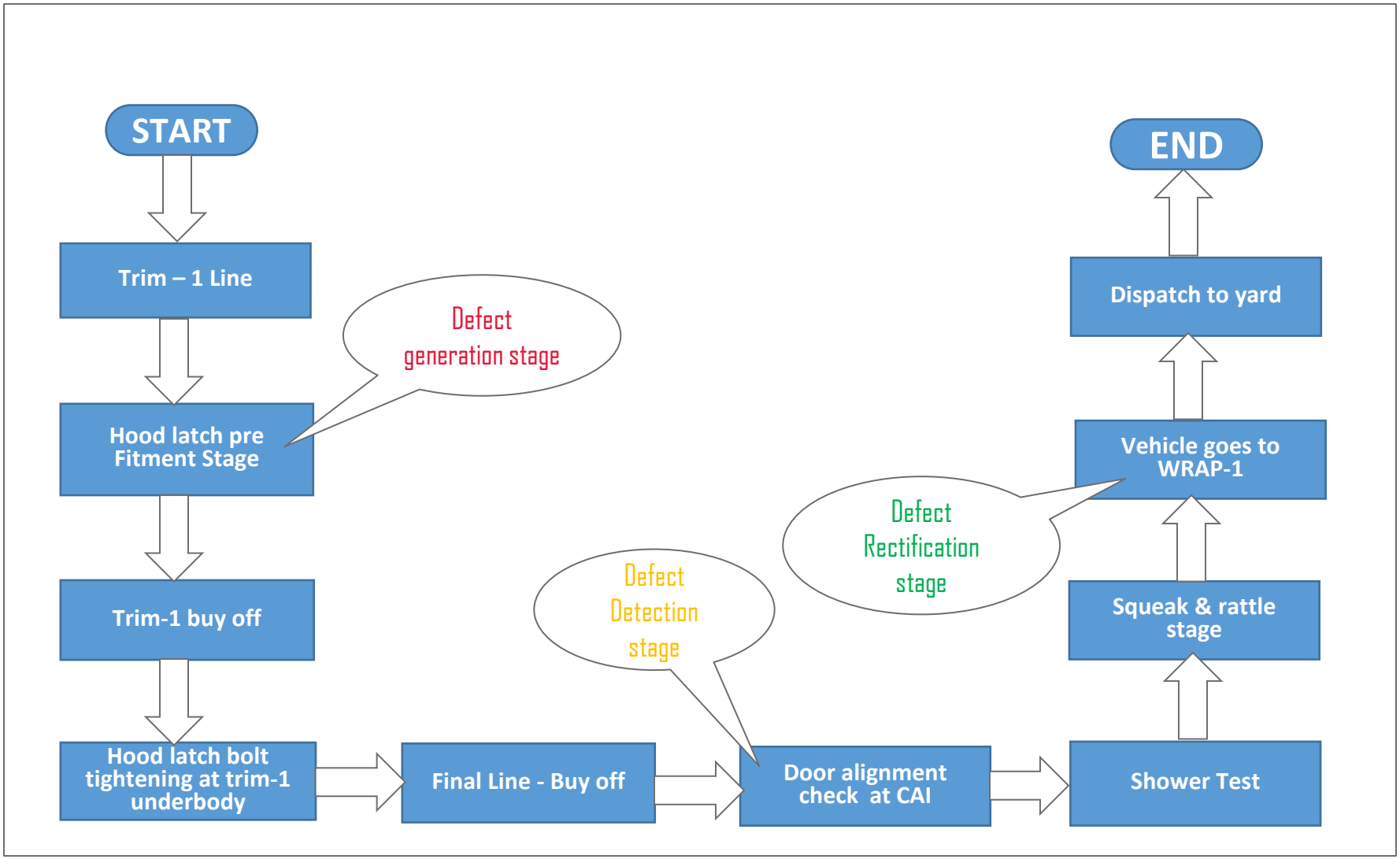

3. Understand the current situation

Month wise Trend

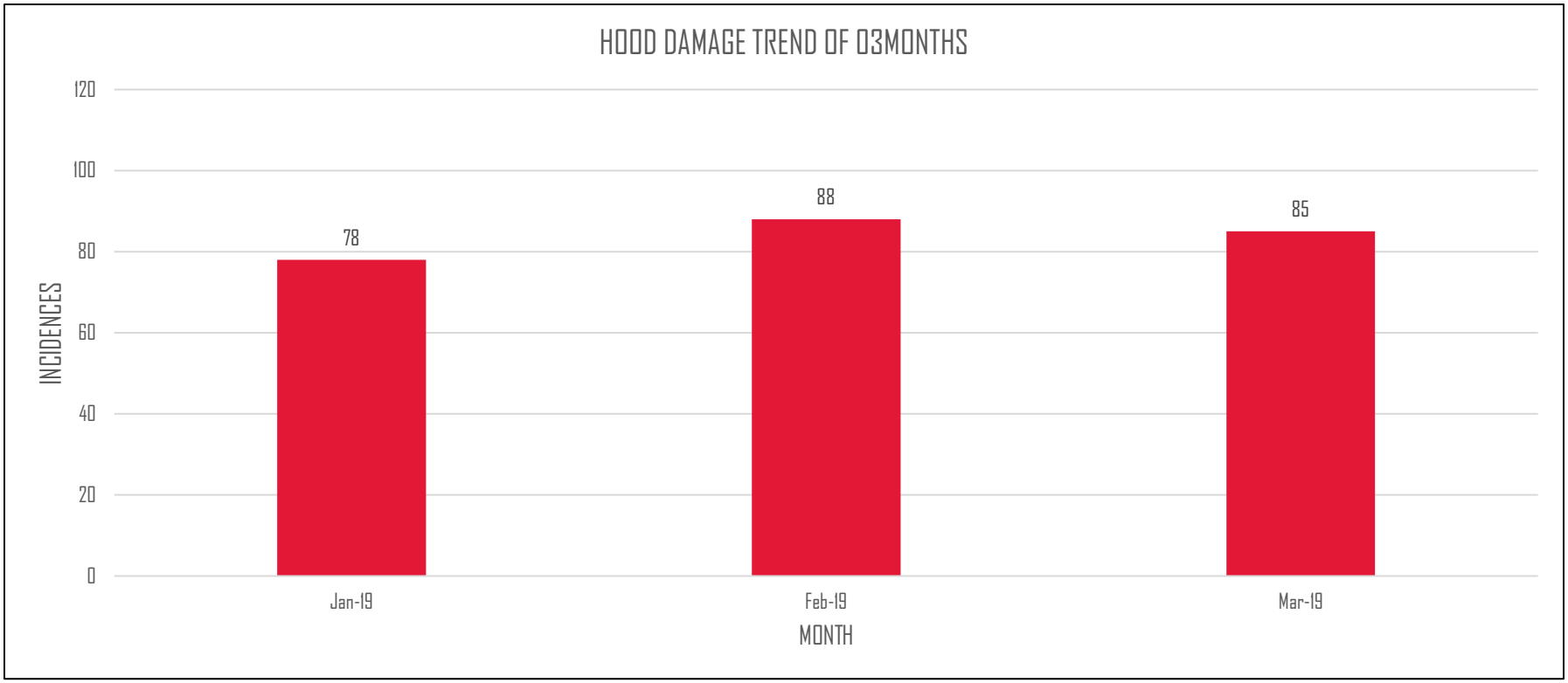

INFERENCE :- As per graph Hood damage issue consistent month on month

Step 3. Understanding Current Situation

Good & Not so good observations

- Issue observed in U321 all variant.
- Issue reported in both the shifts.
- Repair time is high around 10 minutes per vehicle.
- Issue reported at CAI tester line & FAI.
- There was level 3 operators for hood latch & hood alignment stage.
- Not all the vehicles having this issue.
- Defect follows with hood assly.

Step 3. Understanding Current Situation

OK

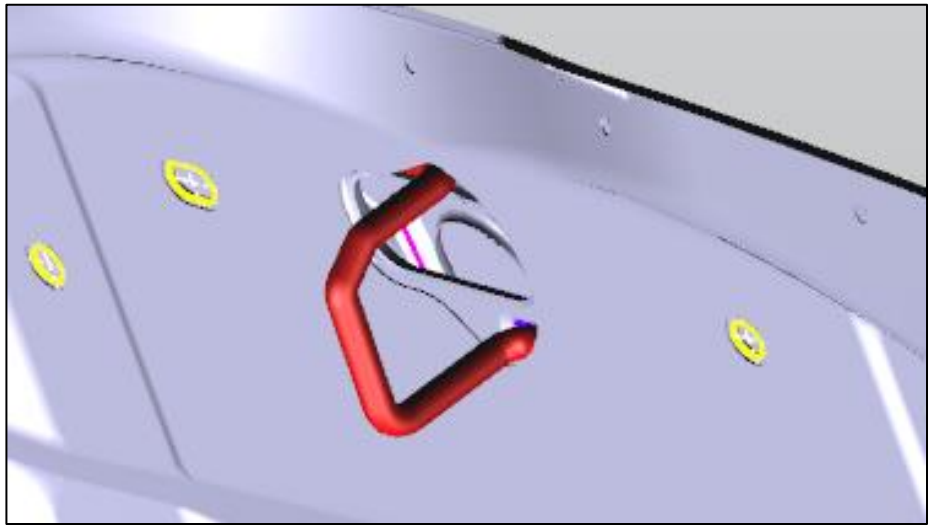

NOT OK

Step 3. Understanding Current Situation

Parts Involved in the analysis:

1. Hood

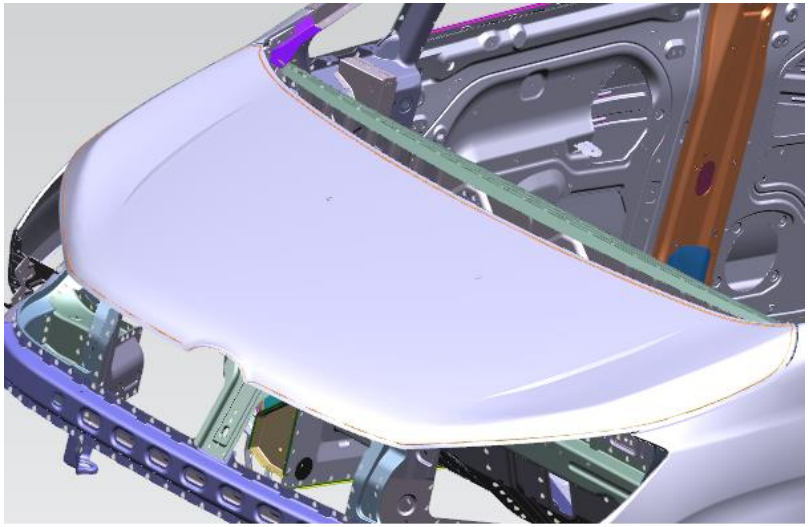

2. Hood latch

3 . Striker

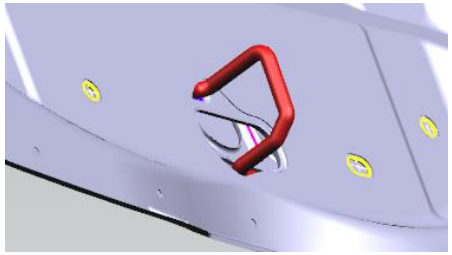

4. Select targets

Present Level:	251 cases reported at CAI based on data of last 03 months
Target :	**Concern elimination by end of May 2019**

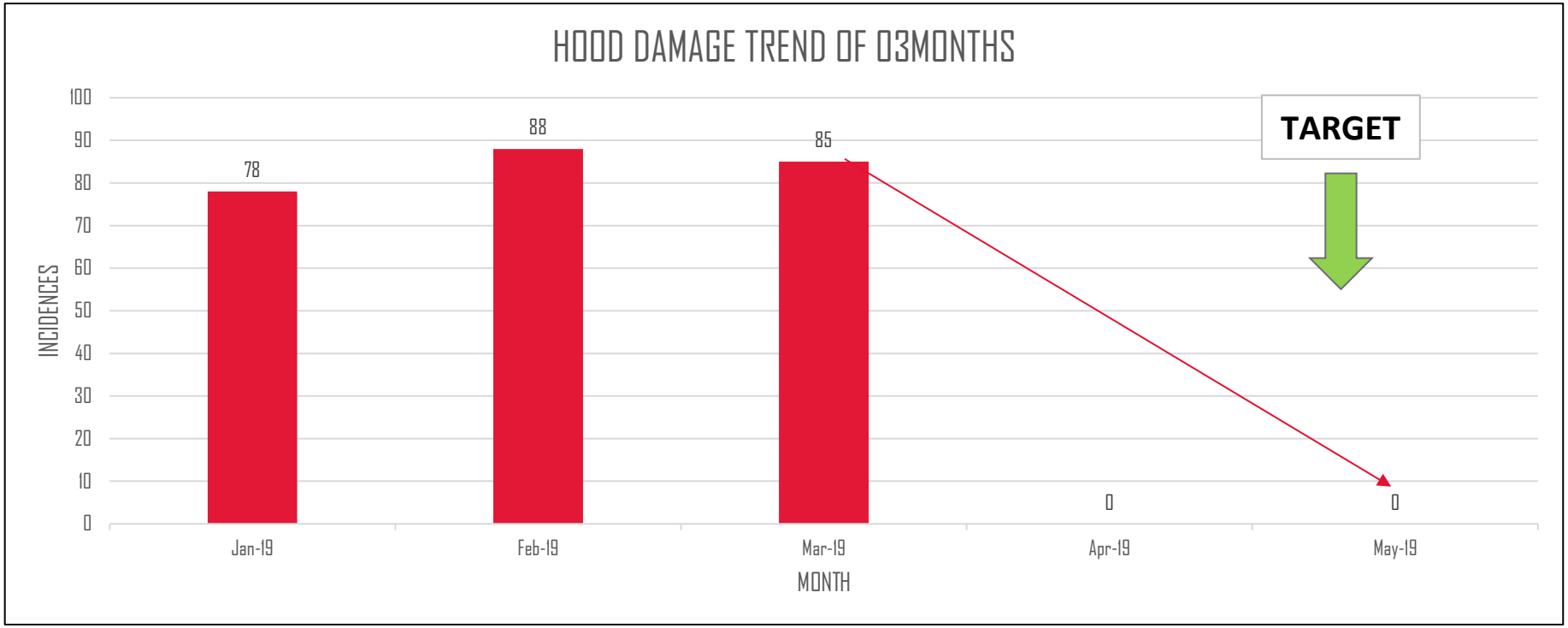

5. Analysis

List of Possible causes after brainstorming among team members

Sr. no	Possible Causes
1	New operator deployed at stage.
2	SOS Not Followed.
3	Unskilled operator for hood latch fitment
4	SOS Inadequete
5	Hood latch lever damaged in recived condition
6	Hood inner panel position shift
7	Hood latch lever position not ok after assly
8	Hood lacth lever loose at part level
9	Hood inner edge to lever gap less
10	Hood striker position not ok
11	Hood latch mtg shift on body panel
12	Wrong tool used for torque application
13	Wrong part fitment
14	SOS Inadequete
15	Improper storage on hood latch line
16	Packaging impropoer from vendor

Step 5. Analysis

5.1 Identify possible causes: Fish Bone diagram

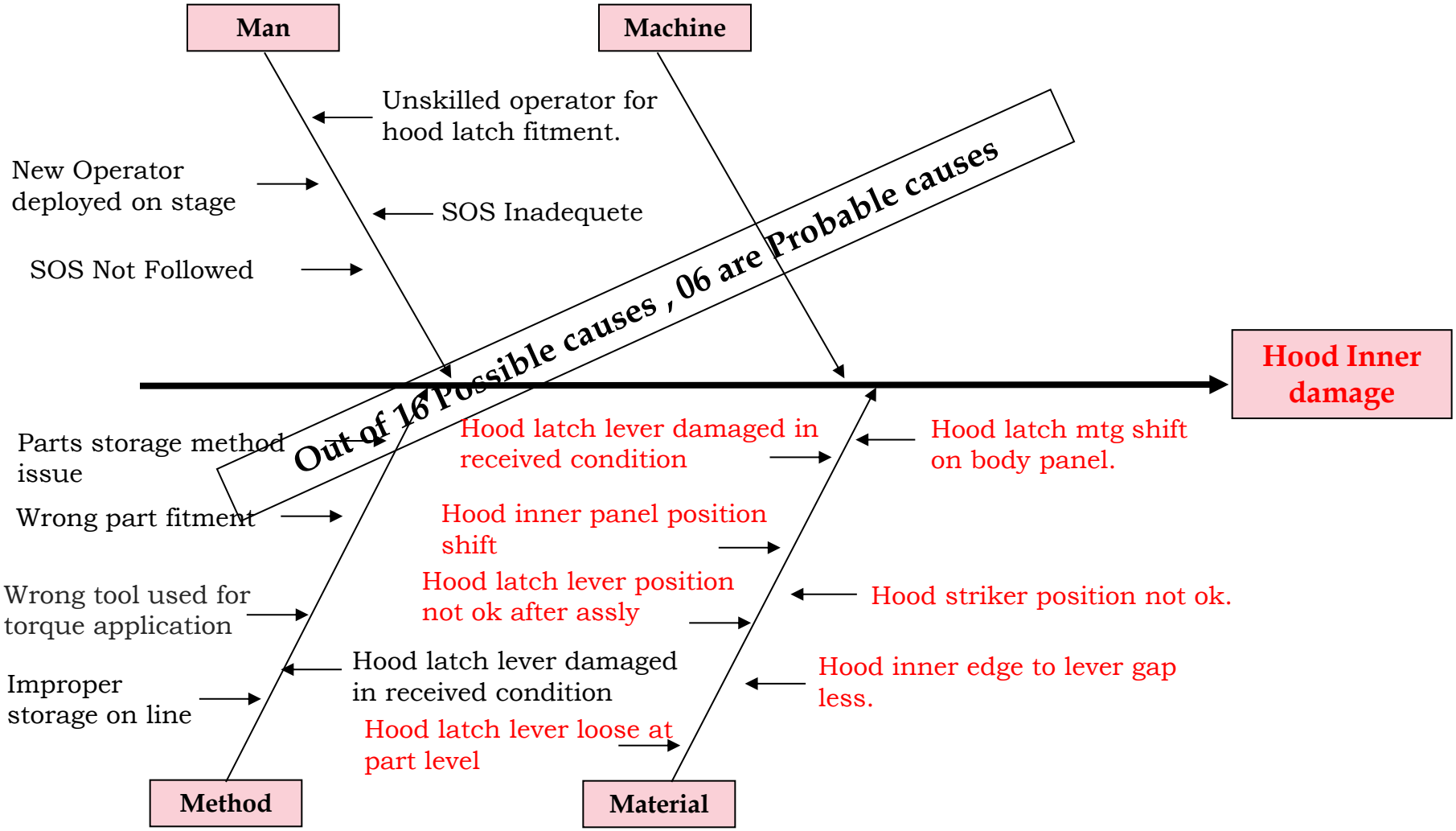

Step 5. Analysis

List of Possible causes identification in Brain storming session

Sr. no	Possible Causes	Prasad	Satish	Amar	Mahesh	Ganesh	Mangesh	Total
1	New operator deployed at stage.	1	1	3	3	3	3	14
2	SOS Not Followed.	1	1	1	1	1	1	6
3	Unskilled operator for window reglator fitment	3	3	3	3	1	9	22
4	SOS Inadequete	1	3	1	1	1	3	10
5	Hood latch lever damaged in recived condition	1	1	1	1	1	1	6
6	Hood inner panel position shift	9	9	9	9	3	9	48
7	Hood latch lever position not ok after assly	3	3	9	9	9	3	36
8	Hood lacth lever loose at part level	9	9	9	9	3	9	48
9	Hood inner edge to lever gap less	9	9	9	9	3	3	42
10	Hood striker position not ok	3	3	9	9	9	3	36
11	Hood latch mtg shift on body panel	9	9	9	9	3	9	48
12	Wrong tool used for torque application	0	0	0	0	1	0	1
13	Wrong part fitment	0	0	0	0	1	0	1
14	SOS Inadequete	3	1	3	3	3	3	16
15	Improper storage on hood latch line	1	1	0	0	0	3	5
16	Packaging impropoer from vendor	3	1	3	1	3	1	12

Selection Criteria: 0-No impact, 1- less impact , 3-High impact , 9- Significant impact.
Threshold Value for selecting cause for hypothesis is 36.

Step 5. Analysis

List of causes not considered as probable causes and reasons for not considering

Sr.No	Not considered Causes	Reasons
1	New operator deployed at stage.	All trained operator deployed on stage
2	SOS Not Followed.	SOS Followed
3	Unskilled operator for window reglator fitment	All trained operator deployed on stage
4	SOS Inadequete	Checked & found ok
5	Hood latch lever damaged in recived condition	Checked & found ok
12	Wrong tool used for torque application	Torque value checked found OK
13	Wrong part fitment	Correct part used.
14	SOS Inadequete	Checked & found ok
15	Improper storage on line	Storage condition is audited & found ok
16	Packaging impropoer from vendor	Checked & found ok as per PDS

Step 5. Analysis

List of causes considered as possible causes taken for test of hypothesis.

Sr. no	Possible Causes
6	Hood inner panel position shift
7	Hood latch lever position not ok after assly
8	Hood lacth lever loose at part level
9	Hood inner edge to lever gap less
10	Hood striker position not ok
11	Hood latch mtg shift on body panel

TEST OF HYPOTHESIS

5.2 Confirm the probable cause:

No	Probable Cause	Testing method	Testing and Observations	Conclusion
1	Hood inner panel position shift	Dimensional Inspection	Inner panel position checked with CMM , 05 parts position found within spec of ±1.5 mm.	**Hypothesis Invalid**

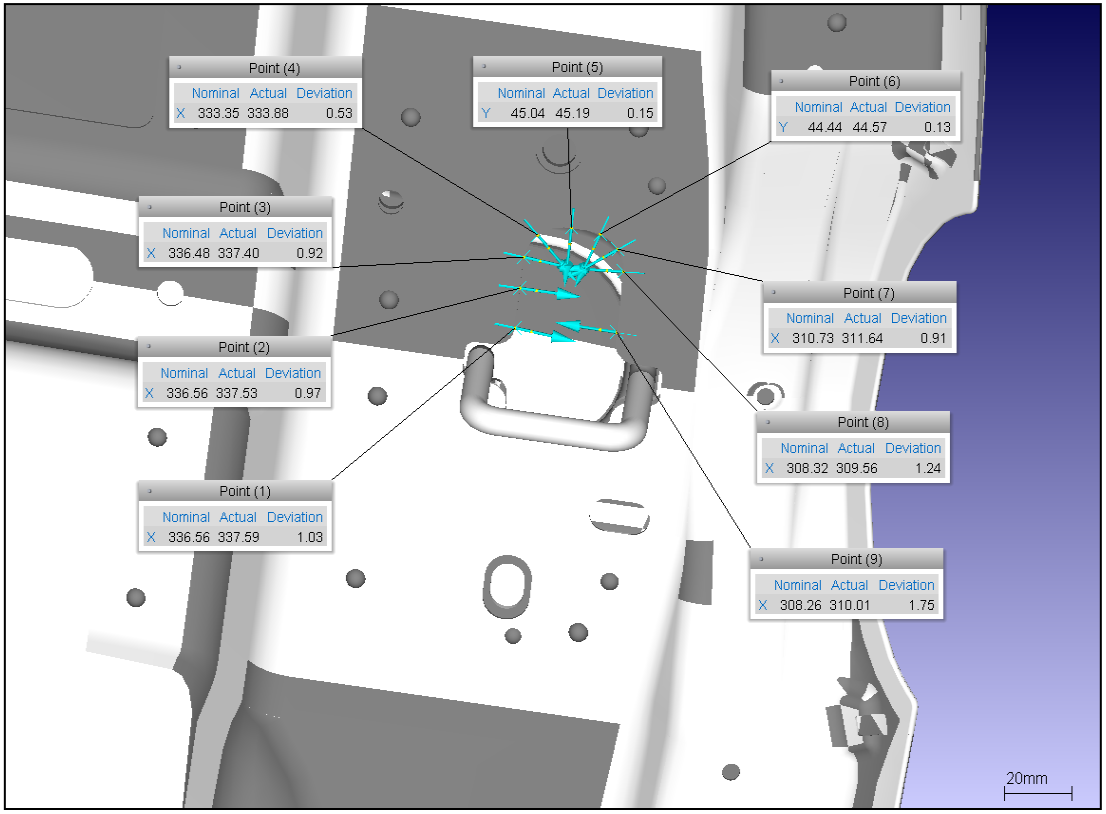

Part found within specification as per CMM inspection report.

Hence hypothesis is invalid.

TEST OF HYPOTHESIS

5.2 Confirm the probable cause:

No	Probable Cause	Testing method	Testing and Observations	Conclusion
2	Hood latch lever position not ok after assly	Visual Inspection. Gap more than 2mm considered as not ok.	20 nos vehicle checked, in 06nos vehicle hood latch lever falls down against prefitted bolt due to gravity.	**Hypothesis valid**

CHECKSHEET

Desc : Hood Latch | Date : 16.04.2019

Model : Marazzo

Sr NO	CHECKPOINTS	WHAT TO CHECK	HOW TO CHECK	Observation \Result
1	Hood latch lever fall down.	Gap between body cross member & latch mtg surface	Visual	Ok
2				Ok
3				Ok
4				Ok
5				Ok
6				Not oK
7				Ok
8				Not oK
9				Ok
10				Ok
11				Ok
12				Not oK
13				Ok
14				Ok
15				Not oK
16				Not oK
17				Ok
18				Ok
19				Not oK
20				Ok

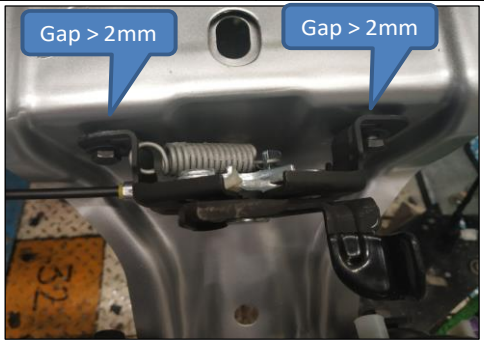

Hood latch lever position found shift as lever falls down against prefitted bolt due to gravity. 06nos vehicle found NG in 20nos vehicle checked. **Hence hypothesis is valid.**

TEST OF HYPOTHESIS

5.2 Confirm the probable cause:

No	Probable Cause	Testing method	Testing and Observations	Conclusion
3	Hood latch lever loose at part level	Dimensional inspection with Vernier caliper.	20 nos parts checked, all found ok within spec of 3±0.5mm. There is no condition of lever loose at part level.	**Hypothesis Invalid**

CHECKSHEET

Desc : Hood Latch | Date : 16.04.2019

Model : Marazzo

Sr NO	CHECKPOINTS	WHAT TO CHECK	HOW TO CHECK	Observation \Result
1	Hood latch lever play	Gap between lever between 3±0.5mm	Vernier Caliper	Ok
2				Ok
3				Ok
4				Ok
5				Ok
6				Ok
7				Ok
8				Ok
9				Ok
10				Ok
11				Ok
12				Ok
13				Ok
14				Ok
15				Ok
16				Ok
17				Ok
18				Ok
19				Ok
20				Ok

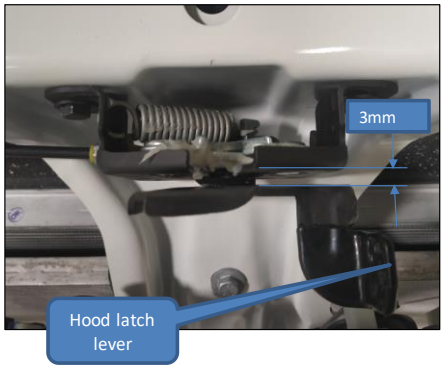

20nos parts checked found ok.
Hence hypothesis is invalid.

TEST OF HYPOTHESIS

5.2 Confirm the probable cause:

No	Probable Cause	Testing method	Testing and Observations	Conclusion
4	Hood inner edge to lever gap less	Dimensional Inspection	20 nos vehicle checked, 14 vehicles gap found less than specification.. Spec : 7±2mm. Observed : 3.5mm, 2.5mm,1.8mm	**Hypothesis valid**

CHECKSHEET

Desc : Hood Latch — Date : 16.04.2019

Model : Marazzo

Sr NO	CHECKPOINTS	WHAT TO CHECK	HOW TO CHECK	Observation \Result
1	Hood latch lever Gap	Gap between lever to hood inner panel. Gap spec : 7±2mm	Taper scale	3.6
2				1.8
3				5.1
4				5.2
5				3.2
6				3.1
7				5.2
8				3.6
9				3.2
10				3.5
11				3.2
12				5.1
13				3.2
14				5.2
15				5.3
16				3.2
17				2.5
18				4.2
19				1.8
20				4.5

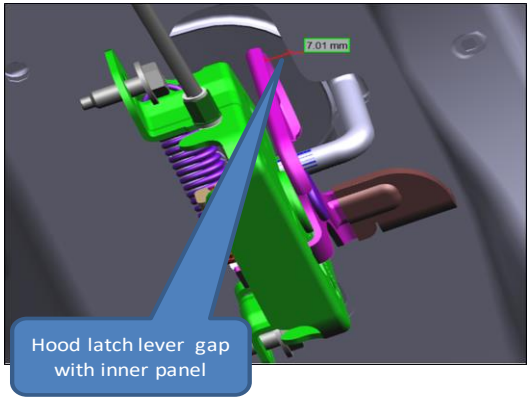

14 vehicles gap found less than specification. i.e 3.5mm,2.5mm,1.8mm

Hence hypothesis is valid.

TEST OF HYPOTHESIS

5.2 Confirm the probable cause:

No	Probable Cause	Testing method	Testing and Observations	Conclusion
5	Hood striker position not ok	Dimensional Inspection	Striker position checked with CMM , 05 parts position found within spec of ±1.5 mm.	**Hypothesis Invalid**

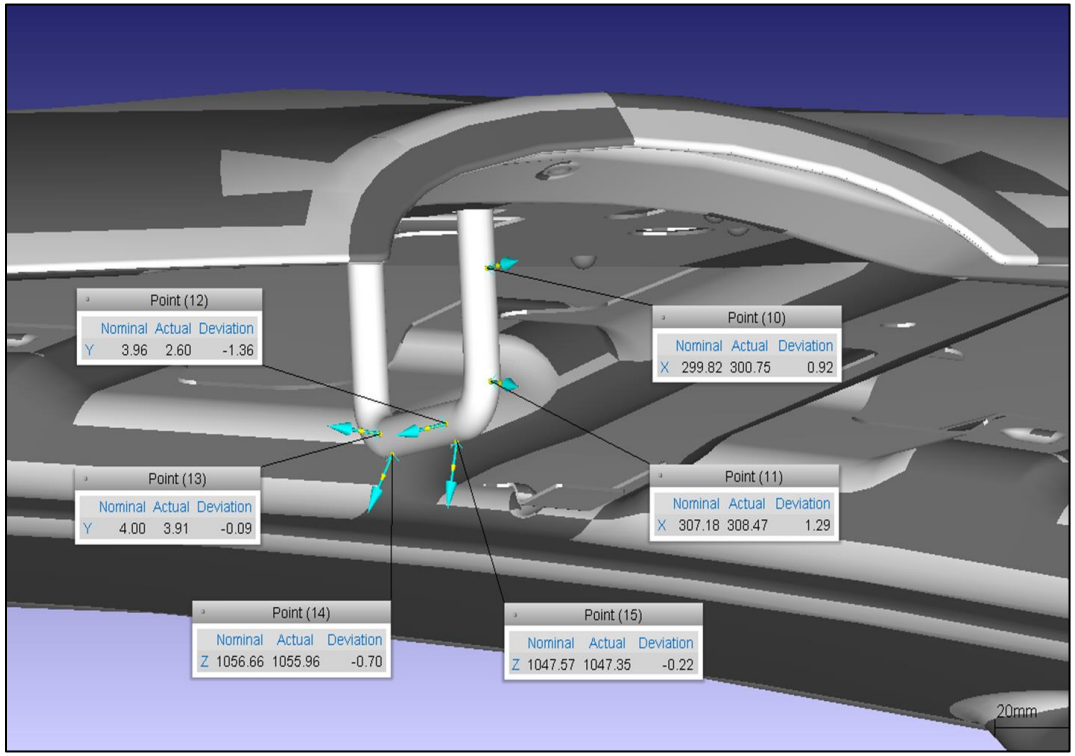

Striker position checked with CMM , 05 parts position found within spec of ±1.5 mm.
Hence hypothesis is invalid.

TEST OF HYPOTHESIS

5.2 Confirm the probable cause:

No	Probable Cause	Testing method	Testing and Observations	Conclusion
6	Hood latch mtg shift on front cross member.	CMM inspection	Cross member position in Y direction checked with CMM , 05 parts position found within spec of ±1.6 mm.	**Hypothesis Invalid**

Datum A-B-C: UB PLP D-E-F: BSO PLP	HOLE	Nominal	PIST Calculation points		Upper Lim	Lower Lim	Image. No.	17.07.19 (13419)	19.07.19 (13577)	22.07.19 (13708)	24.07.19 (13849)	25.07.19 (13941)
A-B-C	K2A0292M001	X		366.708	1.20	-1.20	119	-1.5	-0.37	-1.34	-0.37	-1.09
		Y		-51	1.60	-1.60		0.23	-0.17	-0.19	-0.36	-0.36
		Z		1056.36	1.60	-1.60		-0.63	-0.64	-0.96	-0.78	-0.67
A-B-C	K2A0292M002	X		366.708	1.20	-1.20	121	-2.18	-1.1	-1.91	-0.98	-1.31
		Y		51	1.60	-1.60		-0.6	-0.21	-0.49	-0.55	-0.66
		Z		1056.36	1.60	-1.60		-0.52	-0.78	-0.79	-0.5	-0.87

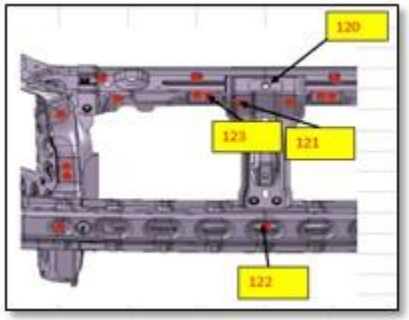

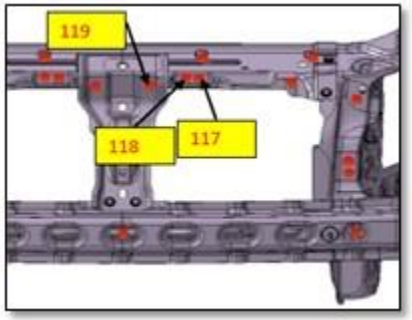

Cross member position in Y direction found Ok, within spec of ±1.6mm. **Hence hypothesis is invalid.**

Note : X coordinate not imp hence NG accepted.

TEST OF HYPOTHESIS

5.3 Identify the root causes:

Sr No.	Probable cause	WHY?	WHY?	WHY?	Action
1.	Hood latch lever position not ok after assly	Gap observed between hood latch mtg face & mtg surface on cross member.	Hood latch fall down against bolt shank as bolt is prefitted at latch fitment stage , & final tightening is at next stage.	No provision of latch prefitment with prescribed torque value at latch fitment stage.	**Provision to be made for hood latch prefitment with specified torque.**
2.	Hood inner edge to lever gap less.	Hood inner edge to lever gap as per design.	Tolerances stack up not considered during product design.		**Hood inner edge to lever gap to be optimised.**

6. Implement the corrective measures

Possible Remedies Identified

Sr. No.	Root Cause	Remedy Developed	Time to implement	Cost of Improvement	Easily reversible	Complexity	Decision
1	No provision of latch prefitment with prescribed torque value at latch fitment stage.	**Provision to be made for hood latch prefitment with specified torque.**	Low	Low	Yes	Low	**Accepted**
2	Tolerances stack up not considered during product design.	**Hood inner edge to lever gap to be optimised.**	High	High	No	Low	**Accepted**

6. Implement the corrective measures

6.1 Actions Decided

Sr. No.	Root Cause	Action plan	Target Date	Responsibility	Status
1	No provision of latch prefitment with prescribed torque value at latch fitment stage.	**Provision made for hood latch prefitment with specified torque.** Torque tool with torque value 1Nm provided for latch bolt prefitment.	15.04.2019	Satish /Prasad	Closed

Corrective Action : Torque tool with torque value 1.0 Nm provided for latch bolt prefitment.

6. Implement the corrective measures

6.1 Actions Decided

Sr. No.	Root Cause	Action plan	Target Date	Responsibility	Status
2	Tolerances stack up not considered during product design.	Hood inner edge to lever gap optimised. **Hood inner panel trim edge reduced by 5mm.**	15.05.2019	Satish Pagar	Closed

Corrective Action : Hood inner panel trim edge reduced by 5mm.

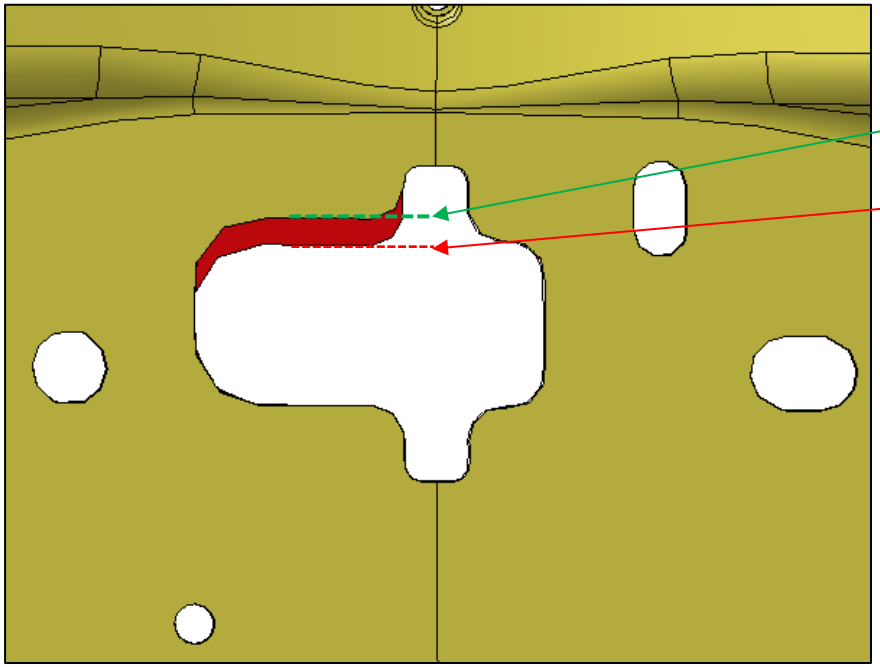

6. Implement the corrective measures

6.1 Actions Decided

BEFORE

AFTER

7. Check & confirm the results & effects

7.1 Verify Results:

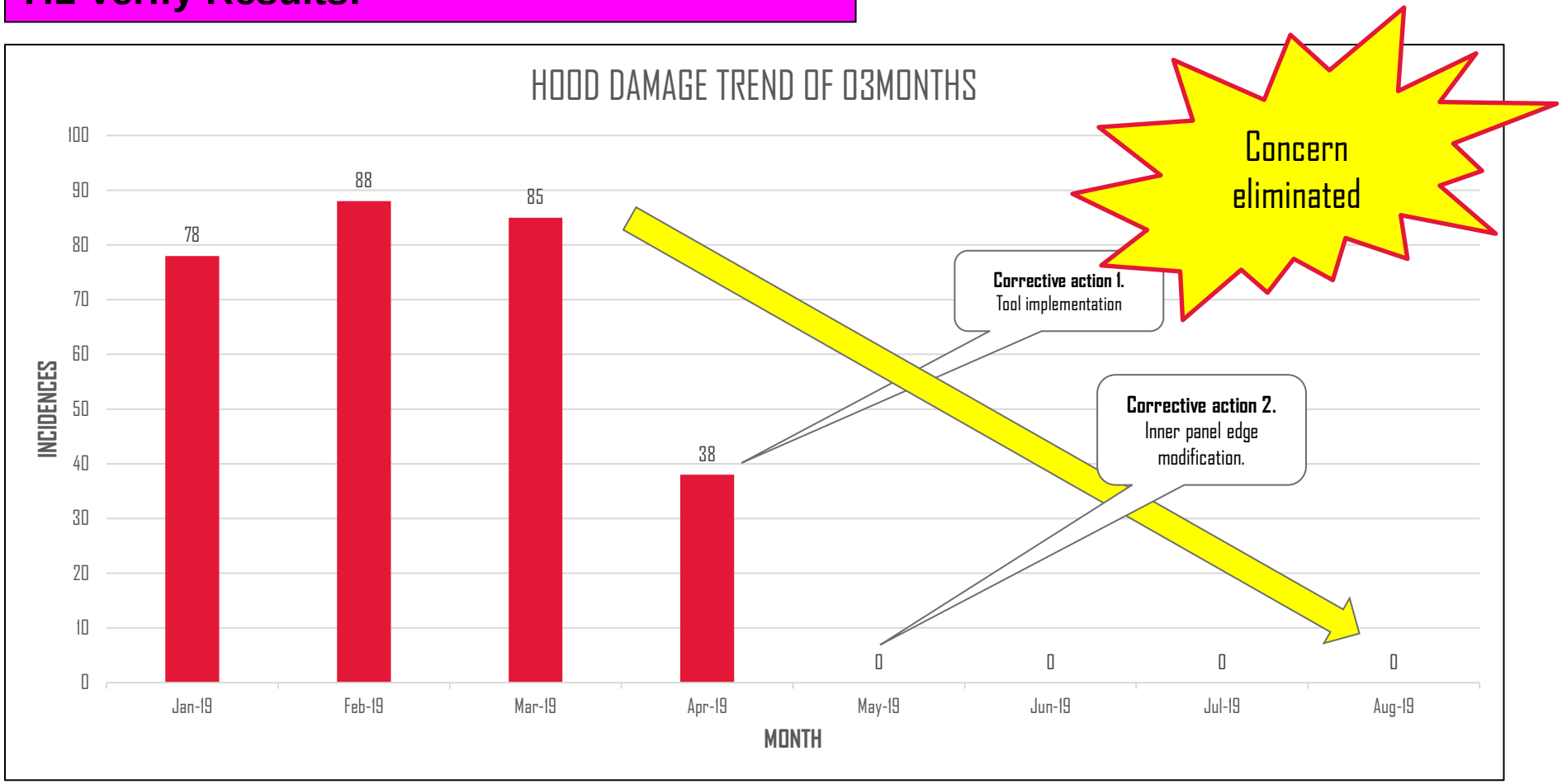

INFERENCE :- As per graph issue reduced month on month after corrective actions.

7. Check & confirm the results & effects

7.2 Full Scale Implementation plan:

S N	Action Taken	Actual date	Responsibility	Status
1	Torque tool provided for hood latch prefitment.	26.03.2019	Pravin Patil	Closed.
2	Engineering change note for hood inner panel trim edge modification.	15.04.2019	Hasan Aksari	Closed.
4	SOS updated	24.04.2019	Prasad Deore	Closed
5	QA matrix Updated	24.04.2019	Vikrant Ghule	Closed
6	Control Plan	15.05.2019	Vikrant Ghule	Closed
6	Awareness given through DRF	24.04.2019	Prasad /Satish	Closed
7	Check point added in buy off check sheet	24.04.2019	Vikrant Ghule	Closed

Check & confirm the results & effects (Cont.....)

7.3 Tangible & Intangible benefits:

Tangible Benefits -

1) STR Increased by 0.5% i.e from 72% to 72.5%
1) Rework cost is reduced by approx.Rs.20967 /Annum.

In tangible Benefits :

1) Learning of CFT working approach
2) Gemba Culture is learned
3) Operator Morale Increased
4) Improved Customer Satisfaction.

Rework Cost estimation		
Description	Units	
Rework time (Approx)	Min	5
Avg Concerns/Day	Nos	5
Total Required Rework time per day	Min	25
Effective working time	Min	465
Operator required /day	nos	0.05
Approx Operator cost/ day	Rs	2256
Operator cost /concern	Rs	121.29
Avg no. of working days	days	25
Operator cost /month	Rs	3032.26
Operator Cost/year	**Rs**	**36387.10**

8. Standardization

8.1 Updation of documents: e.g. DFMEA, PFMEA, DCP, SOP, SOS, drawing.

SN	Document	Actual date	Responsibility	Status
1	Engineering change note	15.04.219	**Arvind Srinivasan**	Closed
2	PFMEA updation	24.04.2019	**Arvind Srinivasan**	Closed
3	SOS updation	24.04.2019	**Jayesh Jirekar**	Closed
4	QA matrix Updation	25.04.2019	**Vikrant Ghule**	Closed
5	Control Plan	15.05.2019	**Vikrant Ghule**	Closed

8.2 Training:

SN	Training Identified	Actual date	Responsibility	Status
1.	Awareness given through DRF.	15.03.2019	Jayesh /Satish	Closed

8.3 Additional Audit & check

1.	Check point added in buy off check sheet	26.03.19	Vikrant Ghule	Closed

8. Standardization

8.1 Updation of documents: e.g. DFMEA, PFMEA, DCP, SOP, SOS, drawing.

DCRN

DESIGN CHANGE REQUEST - DCR043779

Source Of Change Request*: 207094 - GAUBA MANOJ[U321-HEAD]

Product Owner*: 207094 - GAUBA MANOJ[U321-HEAD]

Sub Product Owner*: 301168 - BHOLE MAHENDRA

Location*: AD-NASIK

Reason Code*: Quality Improvement

Change Description (966 Characters Remaining.)*: Hood Inner trim line change by 5mm

Why this change ? (628 Characters Remaining.)*:
4. As per CAD there should be gap of 7mm.
5. Due to tolerance stack up issue bonnet position varies in X direction & leads t fouling.
6. Due to fouling there is paint pill off & may lead to rust in future

Proposed Change (965 Characters Remaining.)*: Hood Inner trim line shifted by 5mm

Is this change affecting VAHAN requirement?* Yes No

WorkFlow Remarks

Note:Fields marked in asterisk(*) are mandatory.

DCR Number: DCR043779

DCR Documents

Select File: Hood Inner Trim Line Change.pptx Browse

Name
Hood Inner Trim Line Change.pptx

Estimated Cost Impact

Type	Saving	Increase
Material		
Conversion		
ManPower		

Affected Model/Major Agg List *
U321

Submit to Workflow | Save | Create New DCR

8. Standardization

8.1 Updation of documents: e.g. DFMEA, PFMEA, DCP, SOP, SOS, drawing.

PFMEA

MAHINDRA & MAHINDRA AUTOMOTIVE AND FARM SECTOR																					
Format Name: Process Potential Failure Mode & Effect Analysis									Format No.:MQS/TPDS/PC10.1/ME01F				Rev. No.: 03				Rev. Date: 30.03.2019				
Document No.			MQS/PFMEA/NASHIK/U321/TCF/0114044						Ref. Document No.												
Operation Description : HOOD LATCH FITMENT									Release Status :												
PROCESS STEP FUNCTION	REQUIREMENTS	POTENTIAL FAILURE MODE	POTENTIAL EFFECT(S) OF FAILURE				CLASS	POTENTIAL CAUSE(S) MECHANISM(S) OF FAILURE	CURRENT PROCESS CONTROL PREVENTION	OCCUR	CURRENT PROCESS CONTROL DETECTION	DETEC	RPN	RECOMMENDED ACTION(S)	RESPONSIBILITY & TARGET COMPLETION DATE	ACTION RESULTS				
			INTERNAL CUSTOMER	SEV	EXTERNAL CUSTOMER	SEV										ACTION TAKEN	SEV	OCC	DET	RPN
SELECT HOOD LATCH AS PER MODEL	SELECTION AS PER MODEL	WRONG PART SELECTION	FURTHER OPERATION NOT POSSIBLE	4	NIL			OPERATOR MISTAKE	AS PER PROCESS SHEET & SOP STICKER ON PART	3	SELF CHECK	7	84							
PICK THE HOOD LATCH AND BRING NEAR TO THE MOUNTING LOCATION, ENGAGE THE HOOD CABLE TO THE LATCH	CORRECT PART SELECTION	WRONG PART SELECTION	REWORK	4	CUSTOMER DISSATISFACTION	4		OPERATOR MISTAKE	OPERATOR TRAINING	2	SELF CHECK	7	56							
	ENGAGEMENT OF CABLE WITH HOOD LATCH	WRONG ENGAGEMENT	REWORK	4	HOOD LATCH INOPERATIVE	6		OPERATOR MISTAKE	OPERATOR TRAINING	3	SELF CHECK	6	108							
PREFIT THE HOOD LATCH TO THE LOCATION BY 02 BOLTS	Prefitment of hood latch completely at wiring stage	Prefitemnt not done upto end	Rework due to hood damage at striker area	5	Incorrect appearance noticed by <75% customers (5)	5		Associate not followed process Untrained associate deployed	Torque tool with 1Nm torque for bolt prefitment Process is mentioned in SOS Training to associate as per SOS Deployment of trained associate on stage	3	Self check & at trim1 buyoff for complete prefitment of hood latch bolt	6	90	Checking is started at BWT 3 buyoff to confirm no damage of hood at striker area	Dinesh Nagrale 30.03.2019	Action is under monitoring	5	3	6	90

8. Standardization

8.1 Updation of documents: e.g. DFMEA, PFMEA, DCP, SOP, SOS, drawing.

SOS

Veh/Org: U-321 Plant: NASIK Section: Trim-1
POS N°: 01/4040 POS vers: 2 SOS: 1/1
Learning time (days)

Standard Operation Sheet
(ANALYSIS)

SOS No :- NSK/SWTF/TRIM-1/U-321 Page 1/5

Process name (Name of the operation): Hood latch Fitment
Safety equipment / clothing: Apron, Hand gloves, Safety shoes
Tools used: Battery tool (7Nm)(10N-7Nm)
Parts used (ref.): Hood latch, M-6 combi bolt (2 NOS)
Total time of the steps: 0min
License and/or Qualifications: Dex. level L3

Rev. date	N	1	2	3	4	5	6	7	8
	01/5/18	5/1/18	04/01/19	11/10/19					
Checked by: Workshop Manager	SBC	SBC	SBC	SBC					
Supervisor: Team	JBS	JBS	JBS	JS					
Supervisor: Team	PVD	PVD	PVD	PD					
Supervisor: Team									
Supervisor: Team									
Supervisor: Team									

No	Analysis of the operation	Time	Main step	Key point	Reason for the key point.	Explanatory drawing. Operating and other rules.
1)	Read the build-sheet					
2)	Pick-up with right hand Hood latch of U-321 from location on right hand palm opening lever facing towards top and Hood latch assy spring side towards opposite to you		Fitment of Hood latch			
3)	Pick-up with left hand Hood latch cable comes from RH side compartment of vehicle and align the assembly locking ball of cable into the locking groove of Hood latch and lock the white locking clip into Hood latch locking slot till its gets click sound heard. Passing the locking ball of cable with "yellow" colour code.			Click sound	To avoid the concern of Hood latch inoperative.	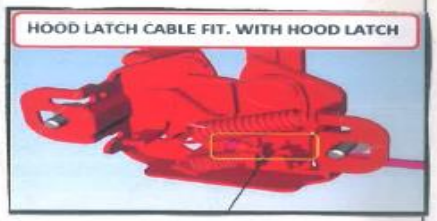
4)	Pick-up with right hand (2) two NOS of M-6 combi bolt and align the Hood latch with left hand on Body mounting hole and prefit the bolt one by one on the Hood latch till the Bolt threads end with the Battery tool torque (7Nm)			Prefit the bolt till threads ends of bolt Shut off (7Nm)	To avoid the bonnet damage. To avoid Hood damaged due to bonnet loose fitment	

What is forbidden and why (Explanation of possible problems or faults)

1) Falling of Hardware material on floor during working is forbidden it cause of loss of time.
2) Prefitment of Hood latch Bolt with 2NS finger spin its forbidden it may cause of due to loose fitment of Hood latch change of bonnet Hood damaged.

How to deal with anomalies (Explanatory items or notes)

If found any anomalies like
1) Hood latch scratches
2) Hood latch shortage
or any inform BOT leader or mention in travellar card.

MQS/MAPS/WSS/F02 1609020013

8. Standardization

8.1 Updation of documents: e.g. DFMEA, PFMEA, DCP, SOP, SOS, drawing.

QA MATRIX

BEFORE

Workstation No.	Process description (POS)	Date	Failure modes	Severity	BWT	Prev. occurence	Potential decfect	Inspection process – Section: Plugging	Latch	Wiring satge	Roof stage	Export	CCB Stage	BWT 2 Buyoff	Underbody	Regulator	Glass	IP	BWT 3 Buyoff	Trim3 Buyoff	Inspection process – Outside section: FAI buyoff	Roller	tester	Shower/model ver	S&Q	ECOS\Dignostics	CV	WRAP	Guarantee value: Workstation	Section	Outside section	PLANT	Faults recorded: Section	Outside section	CUSTOMER	Quality guarantee level: WORKSTATION	Section	Outside section	PLANT	Comments
																																1M	1M	3M					
	Hood latch fitment	**26.3.19**	**Hood damage from inside near striker**	V1	5	1				□ 1				□ 1					□ 1				□ 1					□ 1	1	3	2	5				ok	NOK	NOK	NOK	L2 QCRT

AFTER

Workstation No.	Process description (POS)	Date	Failure modes	Severity	BWT	Prev. occurence	Potential decfect	Inspection process – Section: Plugging	Latch	Wiring satge	Roof stage	Export	CCB Stage	BWT 2 Buyoff	Underbody	Regulator	Glass	IP	BWT 3 Buyoff	Trim3 Buyoff	Inspection process – Outside section: FAI buyoff	Roller	tester	Shower/model ver	S&Q	ECOS\Dignostics	CV	WRAP	Guarantee value: Workstation	Section	Outside section	PLANT	Faults recorded: Section	Outside section	CUSTOMER	Quality guarantee level: WORKSTATION	Section	Outside section	PLANT	Comments
																																1M	1M	3M					
	Hood latch fitment	**26.3.19**	**Hood damage from inside near striker**	V1	5	1				⊙ 3				⊙ 3					□ 1				⊙ 3					□ 1	3	6	4	11				ok	ok	ok	ok	L2 QCRT

8. Standardization

8.1 Updation of documents:

Control Plan

The linked image cannot

MAHINDRA & MAHINDRA
AUTOMOTIVE AND FARM SECTOR

The linked

Format Name: Control Plan	Format No.:MQS/TPDS/PC10.1/ME01F	Rev. No.: 4	Rev. Date:15-05-2019
Document No.	MQS/CP/NASHIK/U321/TCF/0000008	Ref. Document No.	
Operation Description : BUILD SHEET PRINTING			Release Status : SOP

OPERATION NUMBER.	ACT NO.	OPERATION DESCRIPTION	FTG DESCRIPTION	CHARACTERISTICS		SP CHAR CLASS	METHOD						REACTION PLAN
				PRODUCT	PROCESS		PRODUCT / PROCESS SPECIFICATION	EVALUATION MEASUREMENT	SAMPLE		CONTROL METHOD		
									SIZE	FREQ	RECORD	RESP	
Operation Description : HOOD LATCH FITMENT													
0114044	30	PREFIT THE HOOD LATCH TO THE LOCATION BY 02 BOLTS		SELECTION OF BOLT AS PER MODEL				VISUAL	100%	EVERY VEHICLE	NIL	TCF ASSOCIATE	REWORK/INFORM LINE OFFICER OR MAINTENANCE
					PREFITMENT OF BOLTS			VISUAL, ENGAGEMENT OF LATCH	100%	EVERY VEHICLE	NIL	TCF ASSOCIATE	REWORK/INFORM LINE OFFICER OR MAINTENANCE
				TORQUE			1 +/- 1.5 -NM	TORQUE AUDIT	3	Six monthly	TORQUE AUDIT REPORT	ASSOCIATE - MQA	CHECK AND INFORM TO RESPECTIVE LINE OPERATOR,TEAM LEADER,CELL LEADER & MQA CELL LEADER.

8. Standardization

8.2 Training:

SN	Training Identified	Actual date	Responsibility	Status
1.	Awareness given through DRF.	15.03.2019	Prasad/Satish	Closed

8. Standardization

8.3 Additional Audit & check

1	Check point added in buy off check sheet	30.03.2019	Vikrant Ghule	Closed

TRIM-2 BWT -3 BUY-OFF - CHECK POINTS							
					Rev no:-06		Revision on - 30.03.19
Sr. No.	**SC CC**	**Description**	**What to be checked**	**V1/ V2**	**How to Check**	**Why to check**	**Source of complaint**
1		Checking of buildsheet card	Check build sheet for specific variant of the vehicle. Self check signs of operators & any defect written in IO column. Check vehicle as per feature sheet				
2		FITMENT OF HOOD LATCH	Check for no loose fitment of two M-6 bolt. Check no dameged mark on hood inside near stricker	V1	Visual. By hand & Marking on one bolt	Hood latch lever fouling to hood inner panel.	RFI
3		Fitment of hood switch	check for no gap.& correct part (xylo-Black /U321-White) check Connection of hood switch.	V1	visual. Marking on connection pull wire for check connection locking	security system will not work	
4		Horn fitment	check that both horns are not of same tone,matching with dimple on the body. Check rubber gromet on bolt mtg.hole	V1	By hand marking on bolt. Check connection by push /pull and marking on it	Horn sound cracking Horn tone not ok	LSP
5		Pdc bracket lower 3 nut fitment	Check for no loose fitment of 3 no. of m-8 nut	V1	By hand marking on fendor	Rattling noise	

9. Summarize & Plan future actions

9.1 Conclusion:

Hood inner panel damage near latch area concern eliminated with correction in hood inner panel & process improvements.

9.2 Horizontal Deployment:

Analysis is useful in upcoming projects, inputs to DFMEA.

9.3 Lessons Learnt:

Things Gone Wrong :

Initially only mfg process was suspected as cause of concern. Clearance between latch lever & hood inner panel not considered while dimensioning of hood panel geometry.

Things Gone Right :

Brainstorming Happened between CFT team & problem solved by QC story approach.

Appropriate use of DOE tool to capture variation in part dimensions.

Thank you

Visit us at www.mahindra.com

Disclaimer

Mahindra & Mahindra herein referred to as M&M, and its subsidiary companies provide a wide array of presentations and reports, with the contributions of various professionals. These presentations and reports are for informational purposes and private circulation only and do not constitute an offer to buy or sell any securities mentioned therein. They do not purport to be a complete description of the markets conditions or developments referred to in the material. While utmost care has been taken in preparing the above, we claim no responsibility for their accuracy. We shall not be liable for any direct or indirect losses arising from the use thereof and the viewers are requested to use the information contained herein at their own risk. These presentations and reports should not be reproduced, re-circulated, published in any media, website or otherwise, in any form or manner, in part or as a whole, without the express consent in writing of M&M or its subsidiaries. Any unauthorized use, disclosure or public dissemination of information contained herein is prohibited. Unless specifically noted, M&M or any of its subsidiary companies is not responsible for the content of these presentations and/or the opinions of the presenters. Individual situations and local practices and standards may vary, so viewers and others utilizing information contained within a presentation are free to adopt differing standards and approaches as they see fit. You may not repackage or sell the presentation. Products and names mentioned in materials or presentations are the property of their respective owners and the mention of them does not constitute an endorsement by M&M or its subsidiary companies. Information contained in a presentation hosted or promoted by M&M is provided "as is" without warranty of any kind, either expressed or implied, including any warranty of merchantability or fitness for a particular purpose. M&M or its subsidiary companies assume no liability or responsibility for the contents of a presentation or the opinions expressed by the presenters. All expressions of opinion are subject to change without notice.

Copyright © 2012 Mahindra & Mahindra Ltd. All rights reserved.